Kit Easy-Touch - Fixed magnets wood-wood

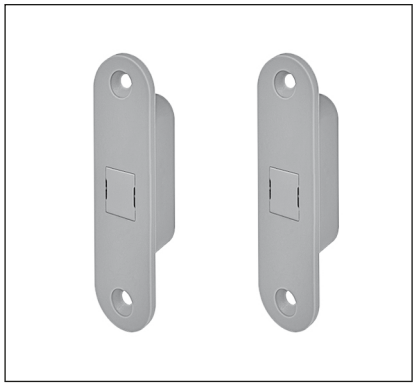

Description

Kit with two Easy-Touch strikers in plastic material with round edges, one of them has a red cover to identify the riverse polarity.
Easy-Touch is completely interchangeable with Easy-Matic and Easy-Fix strikers with 22 mm width and 2,2, mm thickness.

Use

To be used with fixed magnets. In this case, they can be installed in different positions and hidden. If necessary, they can be installed in more magnet couples.

Fastening

Striker fastening with two screws 3,5x20 mm.

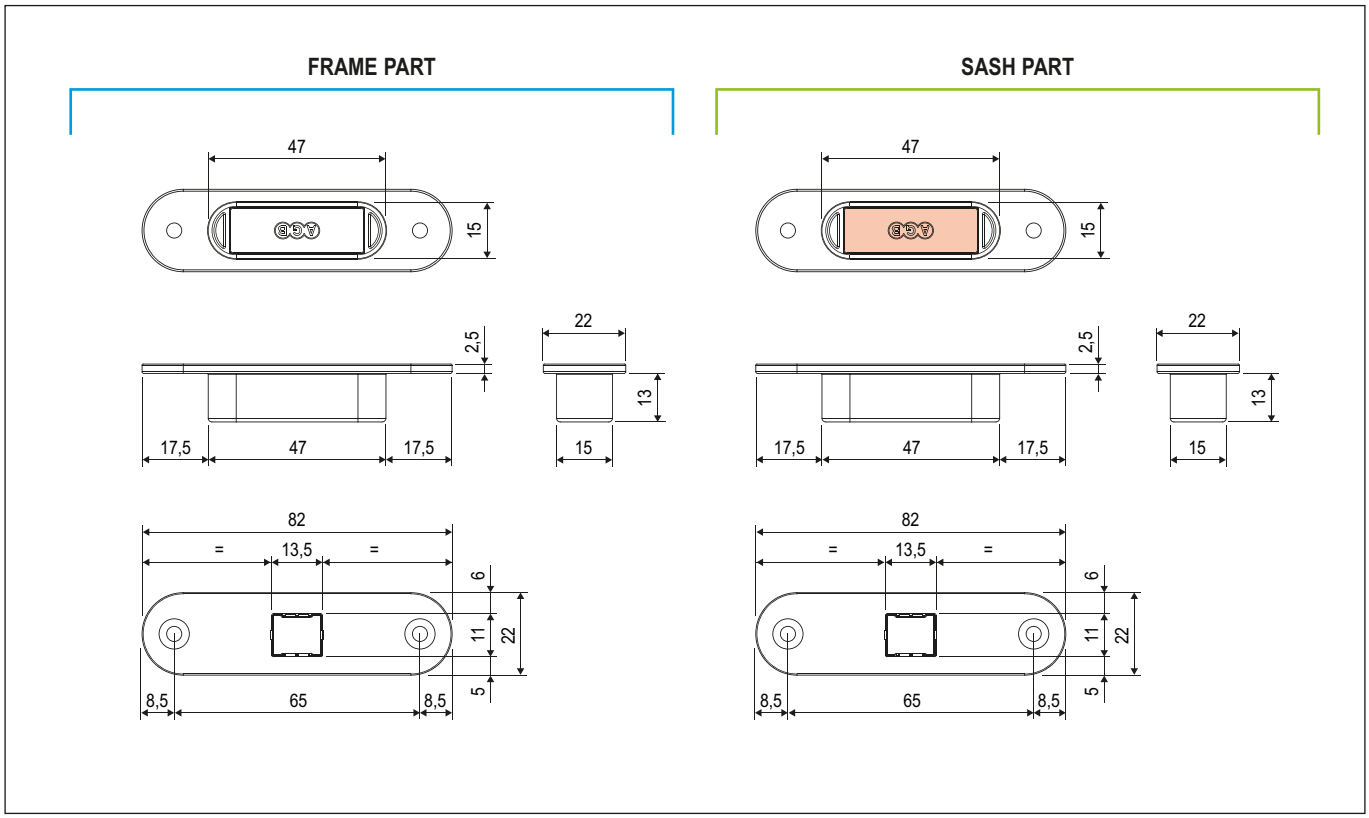

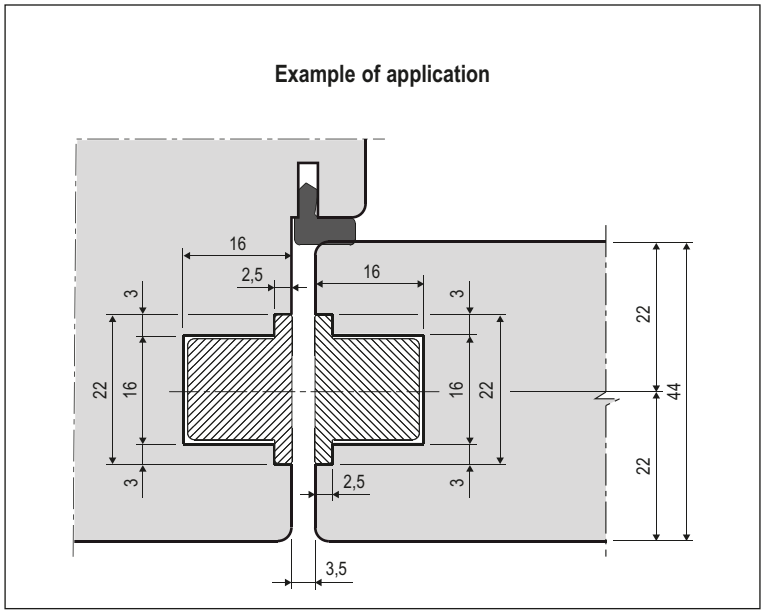

Order Specifications

Article
B02404.36.XX

Note. *Refer to the price list in force to check the availability of the finishes.*