Scivola TT - 16 mm forend, hub and key

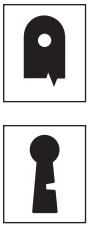

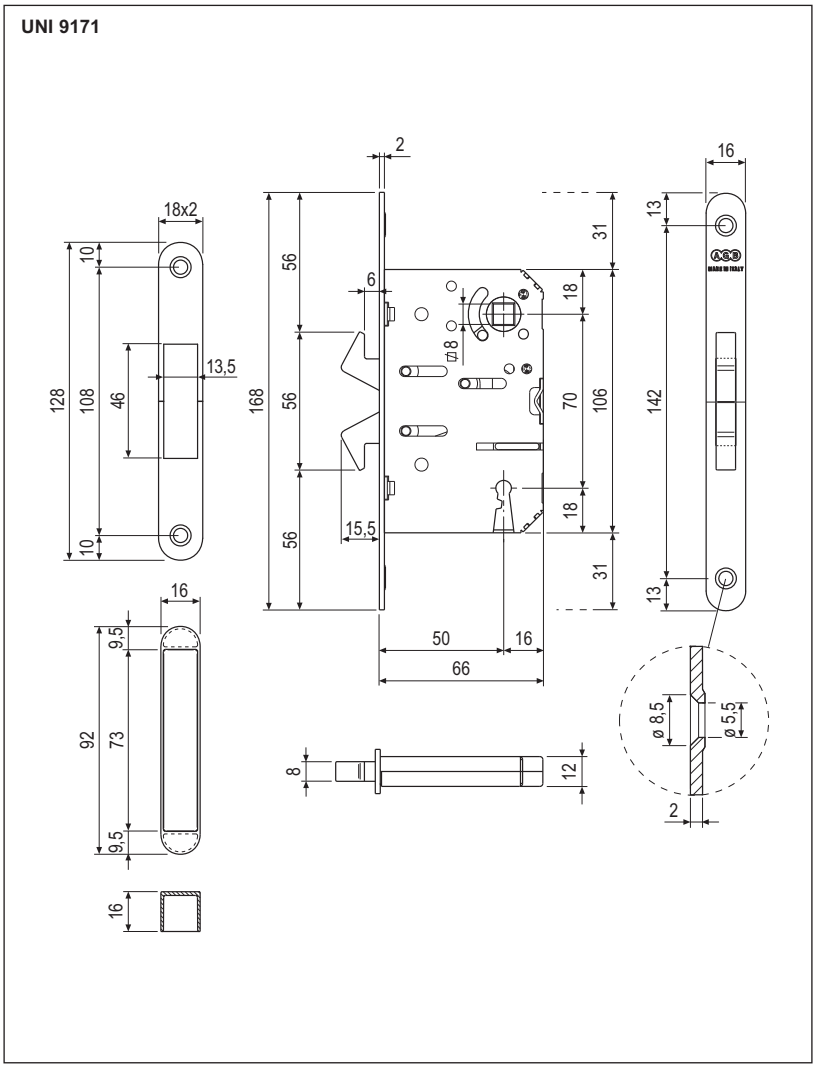

Description

Embedded lock with return claw opposing hooks, striker included. Made entirely of steel. 16 mm forend with round ends and single 50 mm backset. Articulated key with single differ. 18 mm striker forend.

Application

Lock for interior sliding timber doors. Two opposing hooks throw from the lock forend and rotate onto the lower and the upper part of the striker plate when closing. Excellent fastening between sash and frame is ensured by the lock expansion which takes place on a larger surface of the striker. Kit versions are also available, offering a wide range of solutions (see follolip pages). The hub actuates the claw hooks which can be locked with the key.

Mounting

Prepare cutout and mill the panel according to the dimensions shown in the diagram. Secure the lock and striker with four 4x20 mm screws.

NB. *Each pack contains a lock with striker, pocket and articulated key***.**

Order Specifications

Material	SALES CODE			
	Ref.	Backset	Finish code	
STEEL	B06771	50	XX	1

NB. *Refer to the price list in force to check the availability of the finishes.*
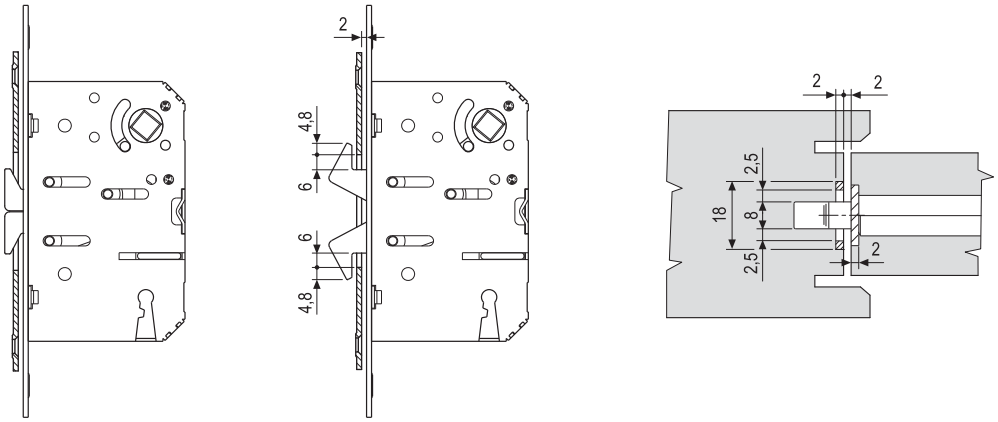
HOOK DETAIL