Vertical bolts

Description

Vertical bolts for shutters with articulated knob and security device to avoid the opening from outside in case of break in attempt.

Application

With know 23 mm high the ABACO bolts are suitable to sash wrapping systems or monoblock systems with reduced space between window and shutter. The blocking device is specially designed to improve the shutter security.

Mounting

According to the desired rod throw and the gap of the shutter, position the bolt on a adequate distance from the edge and fix it with maximum ø4 mm screws.

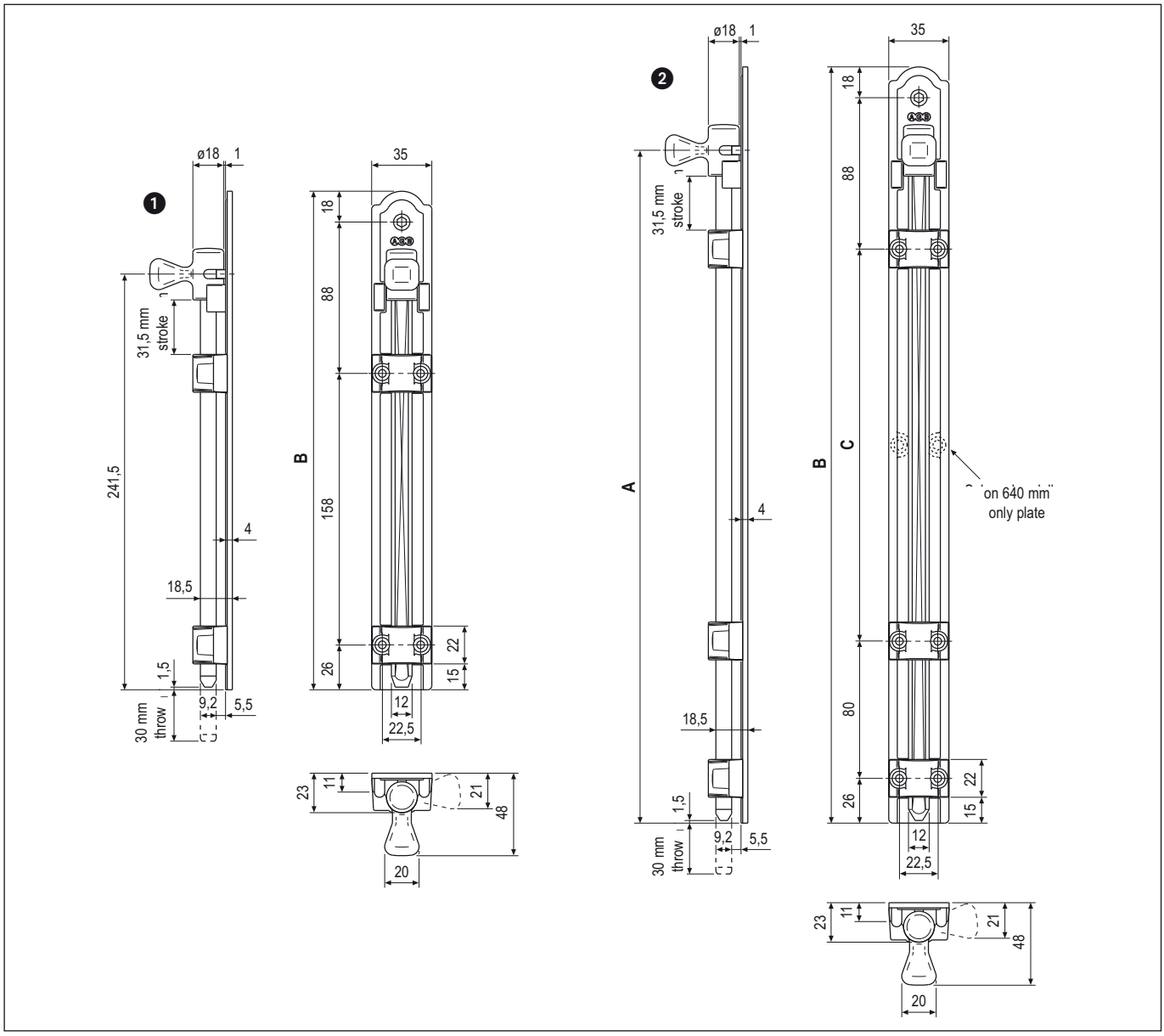

Order Specifications

Ref.	Bracket size A	B	C	Article
1		290		H00960.25.XX
2	391,5	440	228	H00960.40.XX
	491,5	540	328	H00960.50.XX
	591,5	640	428	H00960.60.XX

NB. *Refer to the price list in force to check the availability of the finishes.*